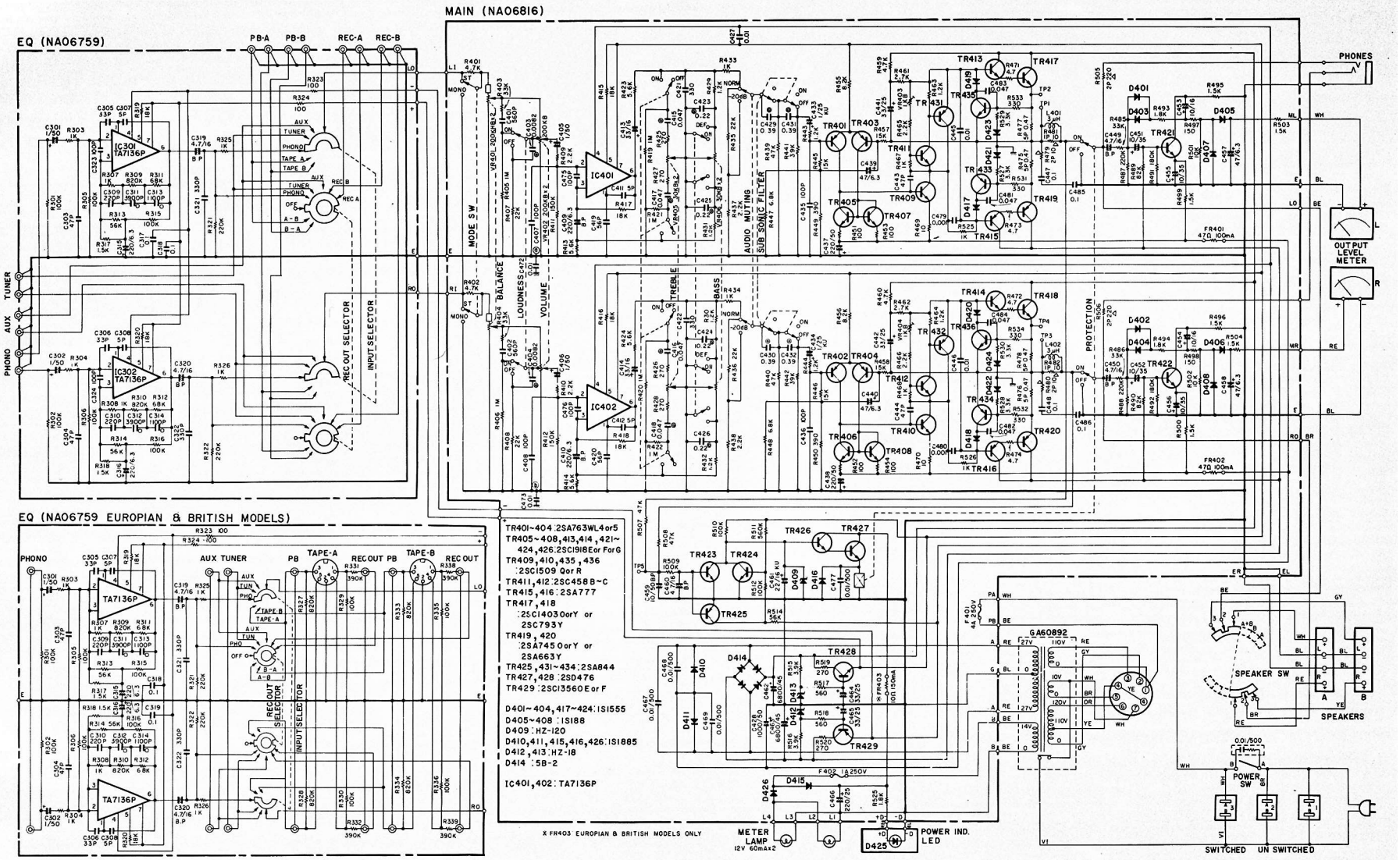
EQ (NA06759)
MAIN (NA06816)
EQ (NA06759 EUROPIAN & BRITISH MODELS)
PHONO
AUX
TUNER
PB-A
PB-B
REC-A
REC-B
IC301 TA7136P
IC302 TA7136P
IC401
IC402
REC OUT SELECTOR
INPUT SELECTOR
MODE SW
BALANCE
LOUDNESS
VOLUME
TREBLE
BASS
AUDIO MUTING
SUB SONIC FILTER
PROTECTION
PHONES
OUTPUT LEVEL METER
SPEAKER SW
SPEAKERS
POWER SW
SWITCHED
UN SWITCHED
METER LAMP
12V 60mA×2
POWER IND. LED
GA60892
TR401~404 :2SA763WL4 or 5
TR405~408,413,414,421~424,426:2SC1918E or F or G
TR409,410,435,436 :2SC1509 Q or R
TR411,412:2SC458B~C
TR415,416 :2SA777
TR417,418 :2SC1403 O or Y or 2SC793Y
TR419,420 :2SA745 O or Y or 2SA663Y
TR425,431~434:2SA844
TR427,428 :2SD476
TR429 :2SC1356 D E or F
D401~404,417~424:1S1555
D405~408 :1S188
D409 :HZ-120
D410,411,415,416,426:1S1885
D412,413:HZ-18
D414 :5B-2
IC401,402: TA7136P
X FR403 EUROPIAN & BRITISH MODELS ONLY